STEAM REGENERATION

A 800 PSIA STEAM REGENERATION PLANT PRODUCES 1000°F STEAM. THE BOILER EFFICIENCY IS 85%. THE CONDENSER IS AT 1 PSIA AND CONDENSATE EXITS THE CONDENSER WITH 9.7°F CONDENSATE DEPRESSION. THE WORKING FLUID EXITS THE DFT AS A SATURATED LIQUID. THE STEAM EXTRACTION PRESSURE FROM THE TURBINE IS 90 PSIA.

FIND:
a) ALL STATE POINT ENTHALPIES
b) MASS FRACTION (mf) OF STEAM EXTRACTED
c) TOTAL PUMP WORK [$\frac{Btu}{lbm}$]
d) TURBINE WORK [$\frac{Btu}{lbm}$]
e) THERMAL EFFICIENCY [%]
f) OPTIMUM EXTRACTION PRESSURE [PSIA]

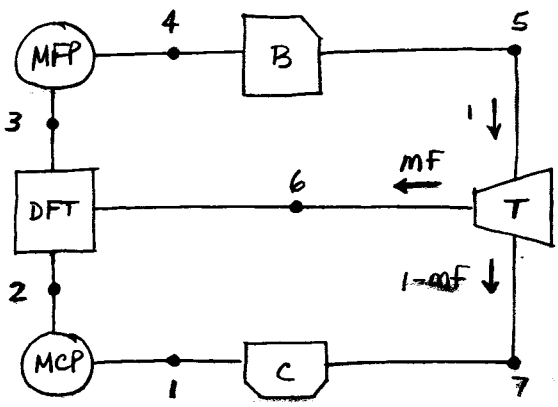

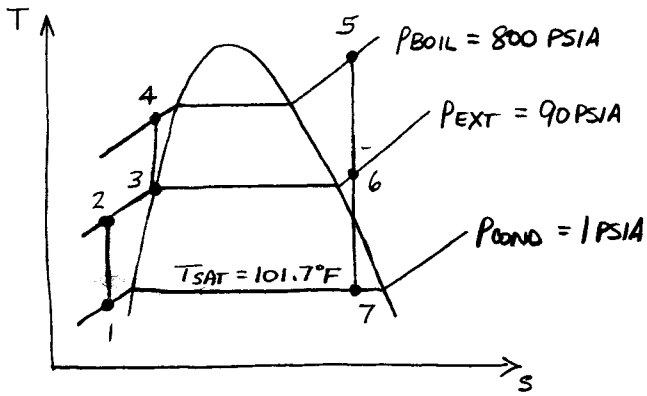

a) ① IS SUBCOOLED TO $T_1 = 101.7°F - 9.7°F = 92°F$

THUS,

$$h_1 = h_f @ 92°F \rightarrow \boxed{h_1 = 60.014 \frac{Btu}{lbm}} \quad \text{(TABLE 1)}, \quad v_1 = .016105 \frac{ft^3}{lbm}$$

② $$w_{MCP} = h_2 - h_1 \rightarrow h_2 = h_1 + w_{MCP}$$
$$= h_1 + v_1(p_2 - p_1)\frac{144}{778}$$
$$= 60.014 + .016105(90-1)\left(\frac{144}{778}\right)$$
$$\boxed{h_2 = 60.279 \frac{Btu}{lbm}}$$

③ IS SATURATED LIQUID (EXIT OF DFT): $h_3 = h_f @ 90$ PSIA

$$\boxed{h_3 = 290.7 \frac{Btu}{lbm}} \quad \text{(TABLE 2)}$$
$$\hookrightarrow v_3 = .017659 \frac{ft^3}{lbm}$$

④ $$w_{MFP} = h_4 - h_3 \rightarrow h_4 = h_3 + w_{MCP}$$
$$= h_3 + v_3(p_4 - p_3)\frac{144}{778}$$
$$= 290.7 + (.017659)(800-90)\frac{144}{778}$$
$$\boxed{h_4 = 293.0 \frac{Btu}{lbm}}$$

⑤ IS SUPERHEATED VAPOR: h_5 @ 800 PSIA, 1000°F

$$\boxed{h_5 = 1511.4 \frac{Btu}{lbm}} \quad \text{(TABLE 3)}, \quad s_5 = 1.6807 \frac{Btu}{lbm\,°R}$$
$$s_5 = s_6 = s_7$$

⑥ IS STILL SUPERHEATED VAPOR → MOLLIER: $\boxed{h_6 = 1243 \frac{Btu}{lbm}}$

⑦ IS SATURATED STEAM → MOLLIER: $\boxed{h_7 = 940 \frac{Btu}{lbm}}$

b) MASS FRACTION (mf): FOUND BY HEAT BALANCE ON DFT

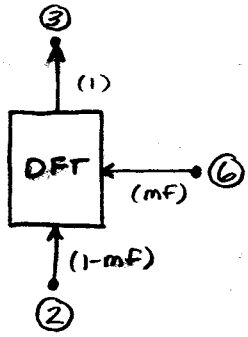

$$\dot{Q}_2 + \dot{Q}_6 = \dot{Q}_3$$

$$h_2(1-mf) + h_6(mf) = h_3(1)$$

$$h_2 - h_2(mf) + h_6(mf) = h_3$$

$$mf = \frac{h_3 - h_2}{h_6 - h_2}$$

$$mf = \frac{290.7 - 60.279}{1243 - 60.279}$$

$$\boxed{mf = .195 \text{ OR } 19.5\%}$$

c) TOTAL PUMP WORK: (REMEMBER, THERE ARE TWO PUMPS)

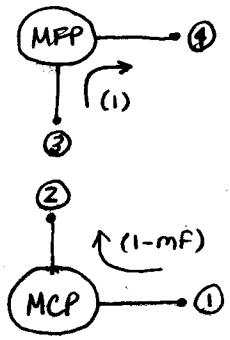

$$W_P(\text{TOTAL}) = W_{MCP} + W_{MFP}$$

$$= (h_2 - h_1)(1-mf) + (h_4 - h_3)(1)$$

$$= (60.279 - 60.014)(.805) + (293.0 - 290.7)$$

$$\boxed{W_P(\text{TOTAL}) = 2.51 \ \frac{Btu}{lbm}}$$

d) TURBINE WORK:

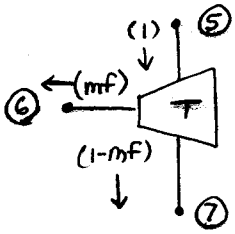

$$W_T = (h_5 - h_6)(1) + (h_6 - h_7)(1-mf)$$

$$= (1511.4 - 1243) + (1243 - 940)(1 - .195)$$

$$\boxed{W_T = 512.3 \ \frac{Btu}{lbm}}$$

e) THERMAL EFFICIENCY:

$$\eta_{TH} = \frac{W_{NET}}{q_S} = \frac{W_T - W_P(\text{TOTAL})}{q_S}, \quad q_S = h_5 - h_4$$

$$= 1511.4 - 293$$

$$q_S = 1218.4 \ \frac{Btu}{lbm}$$

$$\eta_{TH} = \frac{512.3 - 2.51}{1218.4}$$

$$\boxed{\eta_{TH} = 41.8\%}$$

f) OPTIMUM EXTRACTION PRESSURE: (WHAT p_6 OR $p_{EXTRACT}$ SHOULD OPTIMALLY BE)

T_{SAT} (BOILER) = 518.21°F @ 800 PSIA

T_{SAT} (COND) = 101.7°F @ 1 PSIA

T_{SAT} (EXTRACT) = $\frac{1}{2}$(518.21°F + 101.7°F) = 310°F $\xrightarrow[\text{(TABLE 1)}]{\text{CORRESPONDS TO}}$ $\boxed{\approx 78 \text{ PSIA}}$