SINGLE SHAFT GT – IDEAL (BRAYTON)

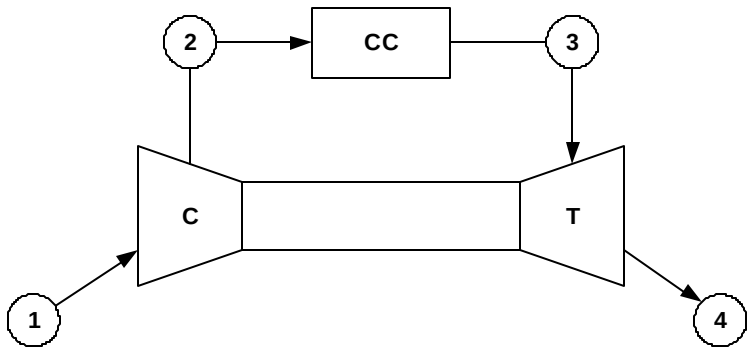

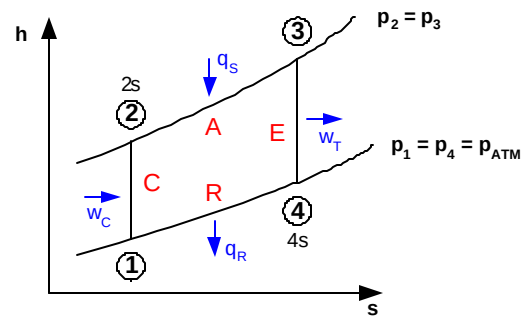

GIVEN → Atmospheric conditions: 14.7 psia, 70°F; Turbine inlet: 1800°F; Pressure ratio: 10

1. Draw Brayton cycle on h-s diagram above. Label state points.
   * Note * State points 2/2s and 4/4s are identical for an isentropic process.

2. Complete the state point properties table using air tables (i.e. variable specific heat):

	1	2 (2s)	3	4 (4s)
p [psia]	14.7	147.0	147.0	14.7
T [°R]	530	1015	2260	1258
h [Btu/lb$_m$]	126.7	244.8	577.2	306.1
Pr	1.299	12.99	285.913	28.591

Note: The properties in **BOLD** (T, h, Pr) can be found in the air tables (pressure cannot be found there).

$$r_p = \frac{p_2}{p_1} = \frac{Pr_{2s}}{Pr_1} \qquad \frac{p_3}{p_4} = \frac{Pr_3}{Pr_{4s}} = r_p$$

Calculate work of the compressor, w_C [Btu/lb$_m$] **$w_C = h_{2s} - h_1 = 244.8 - 126.7 = 118.1$ Btu/lb$_m$**	Calculate work of the turbine, w_T [Btu/lb$_m$] **$w_T = h_3 - h_{4s} = 577.2 - 306.1 = 271.1$ Btu/lb$_m$**
Calculate heat supplied, q_S [Btu/lb$_m$] **$q_S = h_3 - h_{2s} = 577.2 - 244.8 = 332.4$ Btu/lb$_m$**	Calculate heat rejected, q_R [Btu/lb$_m$] **$q_R = h_{4s} - h_1 = 306.1 - 126.7 = 179.4$ Btu/lb$_m$**

Calculate cycle thermal efficiency, η_{TH} [%]

$$h_{TH} = \frac{w_{net}}{q_s} = \frac{w_T - w_C}{q_s} = \frac{153.0}{332.4} = 46.0\% = \frac{q_{net}}{q_s} = \frac{q_s - q_r}{q_s}$$