PROBLEM NO. 4-45 | MECHANICAL ENGINEERING DEPARTMENT | NAME KOUL

DATE | SECTION

Given: Fig P4-45

$\Delta T = +80°F$

$\alpha_{steel} = 6.6\times10^{-6}/°F$

$\alpha_{Al} = 12.5\times10^{-6}/°F$

Find: Movement of pointer (Y_0)

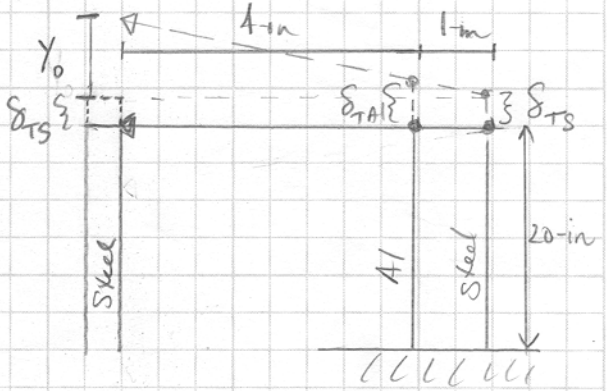

System Sketch or FBD

Relationships:

$$\varepsilon_T = \alpha \Delta T$$

$$\varepsilon = \frac{\delta}{L}$$

Solution:

$$\varepsilon_{T\,steel} = 6.6\times10^{-6}(80) = +528\,\mu$$

$$\varepsilon_{T\,Al} = 12.5\times10^{-6}(80) = +1000\,\mu$$

$$\delta_{T\,steel} = \varepsilon_{T\,steel}(L) = (528\times10^{-6})(20) = 0.01056\text{-in}$$

$$\delta_{T\,Al} = \varepsilon_{T\,Al}(L) = (1000\times10^{-6})(20) = 0.02\text{-in}$$

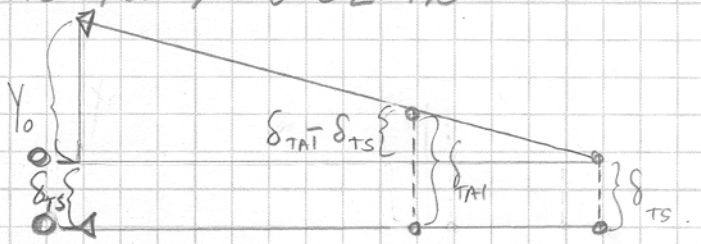

Similar Δs:

$$\frac{Y_0}{5} = \frac{\delta_{TAl} - \delta_{TS}}{1} = 0.02 - 0.01056$$

$$\boxed{Y_0 = 0.0472\text{-in}}$$

PROBLEM NO. 4-50 | MECHANICAL ENGINEERING DEPARTMENT | NAME Koul

DATE | SECTION

Given: $d = 25\text{ mm}$ $\quad m = 2500\text{ kg}$

$\alpha = 22.5\times10^{-6}/°C$ $\quad \Delta T = -50°C$

$E = 73\text{ GPa}$

$\nu = 0.33$

Find: (a) σ_n

(b) ε_n

(c) δ_d

Relationships:

$$\sigma = \frac{P}{A} \qquad \sigma = E\varepsilon$$

$$\varepsilon_n = \frac{\delta}{L} \qquad \varepsilon_T = \alpha\Delta T$$

$$\nu = \frac{-\varepsilon_{lat}}{\varepsilon_{long}}$$

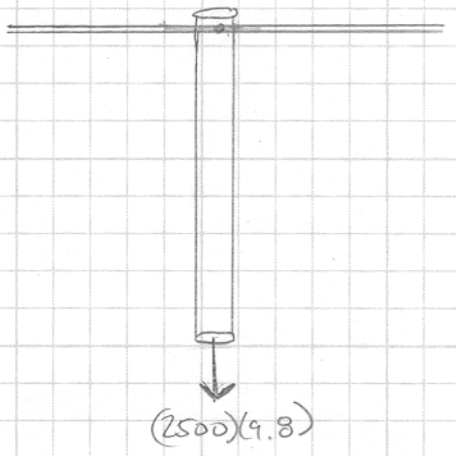

System Sketch or FBD

Solution:

(a) $$\sigma_n = \frac{P}{A} = \frac{(2500)(9.8)}{\frac{\pi}{4}(25\times10^{-3})^2} = \boxed{49.9\text{ MPa}}$$

(Assume diameter change does not significantly affect σ_n)

(b) Assume elastic limit has not been exceeded ($\sigma_{y_{Al}} \sim 160\text{ MPa}$)

$$\varepsilon_n = \frac{\sigma_n}{E} = \frac{49.91\text{ MPa}}{73{,}000\text{ MPa}} = 683.7\mu$$

$$\varepsilon_T = \alpha\Delta T = -22.5(50) = -1125\mu$$

$$\varepsilon_{TOT} = \varepsilon_n + \varepsilon_T = 683.7 - 1125$$

$$\boxed{\varepsilon_{TOT} = -441.3\mu} \text{ (axial)}$$

(c) $$\varepsilon_{lat} = -\nu(\varepsilon_{long}) = -\nu(\varepsilon_n) = -0.33(683.7\mu) = -225.6\mu$$

$\varepsilon_{T,lat} = -1125\mu$ (same as above!)

$$\varepsilon_{TOT} = \varepsilon_{lat} + \varepsilon_{T,lat} = -225.6 - 1125$$

$$\varepsilon_{TOT} = -1350.6\mu \text{ (lateral)}$$

$$\delta_d = \varepsilon_{TOT}\, d = (-1350.6\times10^{-6})(25\text{ mm})$$

$$\boxed{\delta_d = -0.0338\text{ mm}} \text{ (contraction)}$$

PROBLEM NO. 465	MECHANICAL ENGINEERING DEPARTMENT	NAME KOOL
DATE		SECTION

Given:

AC ⇒ annealed red brass, $A_{AC} = 1 in^2$, $\sigma_{AC} \leq 10 ksi$

BC ⇒ annealed bronze, $A_{BC} = 1.25 in^2$, $\sigma_{BC} \leq 14 ksi$

Find: (a) FS w/ respt to yielding in AC, BC based on allowable stress

(b) FS w/ respt to fracture in AC, BC

Relationships:

$$FS = \frac{\text{Failure } \sigma}{\text{Computed } \sigma}$$

$$\text{Allowable } \sigma = \frac{\text{Failure } \sigma}{FS}$$

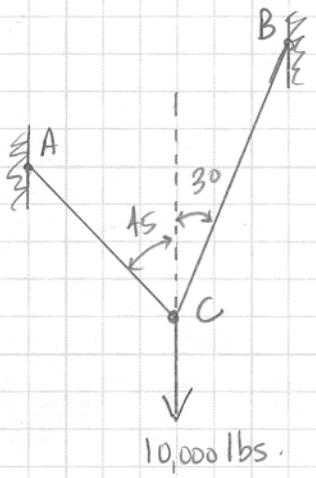

System Sketch or FBD

Solution: (a) For yielding, the failure stress is equal to σ_y

AC ⇒ $\sigma_y = 15$ ksi (App B) $FS_{AC} = \frac{\text{Failure } \sigma}{\text{allowable } \sigma} = \frac{15 ksi}{10 ksi} = \boxed{1.50}$

BC ⇒ $\sigma_y = 20$ ksi $FS_{AC} = \frac{20 ksi}{14 ksi} = \boxed{1.43}$

(b) Calculate actual σ in each bar:

FBD of C

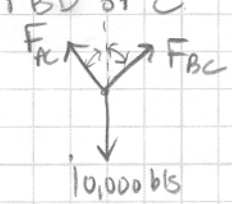

$\Sigma F_x = F_{BC} \cos 60° - F_{AC} \cos 45° = 0$

$\Sigma F_y = F_{BC} \cos 30° + F_{AC} \cos 45° - 10{,}000 = 0$

$F_{AC} = 5176.4$ lbs.

$F_{BC} = 7320.5$ lbs

$\sigma_{AC} = \frac{F_{AC}}{A_{AC}} = \frac{5176.4}{1} = 5176.4$ psi $\sigma_{BC} = \frac{F_{BC}}{A_{BC}} = \frac{7320.5}{1.25} = 5856.4$ psi

For fracture, the failure stress is equal to σ_T

AC ⇒ $\sigma_T = 40$ ksi $FS_{AC} = \frac{\text{Failure } \sigma}{\text{computed } \sigma} = \frac{40 ksi}{5.1764} = \boxed{7.7}$

BC ⇒ $\sigma_T = 50$ ksi $FS_{BC} = \frac{50 ksi}{5.8564} = \boxed{8.5}$