PROBLEM NO. 3-2

DATE

MECHANICAL ENGINEERING DEPARTMENT

NAME Koul

SECTION

Given: $\varepsilon_f = 1200\,\mu m/m$

$d = 200\,mm$

$L = 400\,mm$

Find: $\delta \; (= \Delta l)$

Relationships:

$$\varepsilon = \frac{\delta}{L}$$

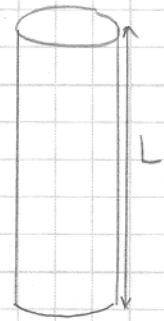

System Sketch or FBD

Solution:

$$\varepsilon = \frac{\delta}{L}$$

$$\delta = \varepsilon L = 1200\,\mu m/m \,(0.40\,m)$$

$$\boxed{\delta = 480\,\mu m}$$

PROBLEM NO. 3-6	MECHANICAL ENGINEERING DEPARTMENT	NAME KOUL
DATE		SECTION

Given: Fig P3-6

$\varepsilon_{BF} = 400\ \mu m/m$ when P is applied

Find: (a) ε_{CE}

(b) ε_{CE} if there is a 0.25 mm clearance in pin C

Relationships:

$$\varepsilon = \frac{\delta}{L}$$

Assume dimensions shown are before P is applied.

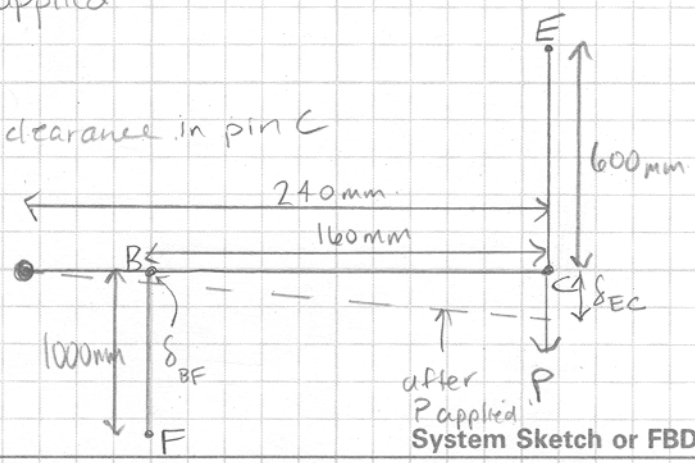

System Sketch or FBD

Solution:

(a) $\delta_{BF} = \varepsilon_{BF} L_{BF} = 400\ \mu m/m\ (1\ m) = 400\ \mu m$

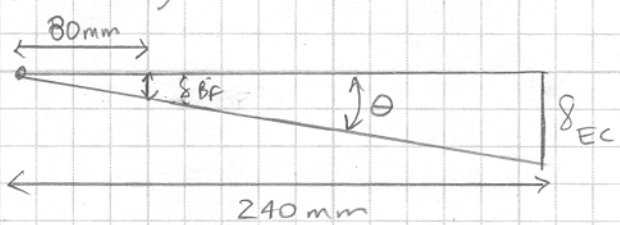

$$\tan\theta = \frac{400\ \mu m}{80000\ \mu m}$$

$$\tan\theta = \frac{\delta_{CE}}{240000\ \mu m}$$

$$\therefore \frac{400\ \mu m}{80000\ \mu m} = \frac{\delta_{CE}}{240000\ \mu m}$$

$$\delta_{CE} = 1200\ \mu m$$

$$\varepsilon_{CE} = \frac{\delta_{CE}}{L_{CE}} = \frac{1200\ \mu m}{0.6\ m}$$

$$\boxed{\varepsilon_{CE} = 2000\ \mu m/m}$$

(b) $\delta_{CE} = 1200\ \mu m - 250\ \mu m = 950\ \mu m$

$$\varepsilon_{CE} = \frac{950\ \mu m}{0.6\ m} = 1583\ \frac{\mu m}{m}$$

PROBLEM NO. 3-17	MECHANICAL ENGINEERING DEPARTMENT	NAME KOUL
DATE		SECTION

Given: Fig P3-17

Find: (a) δ_{TOT}
(b) ε_{avg}
(c) ε_{max}

Relationships:

$$\varepsilon_{(point)} = \frac{\gamma y}{3E} \quad (*)$$

$$\varepsilon_{(point)} = \frac{d\delta_n}{dL}$$

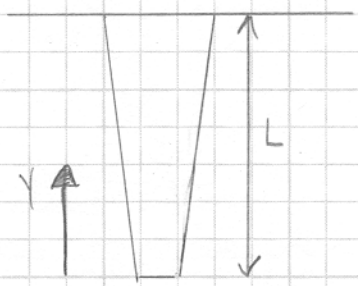

System Sketch or FBD

Solution:

(a) $\varepsilon_{(point)} = \dfrac{d\delta_n}{dL}$

$$\delta_{TOT} = \int_0^L \varepsilon(y)\,dy = \int_0^L \frac{\gamma y}{3E}\,dy$$

$$\delta_{TOT} = \frac{\gamma y^2}{6E}\Big|_0^L$$

$$\boxed{\delta_{TOT} = \frac{\gamma L^2}{6E}}$$

(b) $\varepsilon_{avg} = \dfrac{\delta_{TOT}}{L} = \dfrac{\gamma L^{\cancel{2}}}{6E\cancel{L}}$

$$\boxed{\varepsilon_{avg} = \frac{\gamma L}{6E}}$$

(c) The max strain will be when $y = L$ according to eq (*)

$$\boxed{\varepsilon_{max} = \frac{\gamma L}{3E}}$$

Note ε_{max} is twice ε_{avg}