PROBLEM NO. 2-90 | MECHANICAL ENGINEERING DEPARTMENT | NAME Koul

DATE | SECTION

Given: Fig P2-90

$\sigma_y = 120\,MPa$

$\sigma_x = 20\,MPa$

$\tau_{xy} = \tau_{yx} = -80\,MPa$

Find: σ_n, τ_{nt} on AB

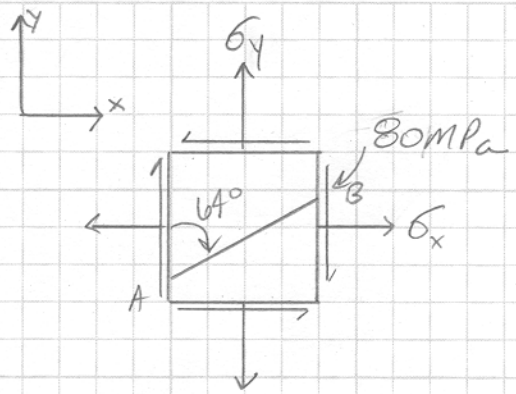

Relationships:

Eq 2-12
2-13

System Sketch or FBD

Solution: In Eq 2-12, 13,

θ is positive when measured in the acute, CCW direction from an x axis to an N axis.

$\theta = -64°$

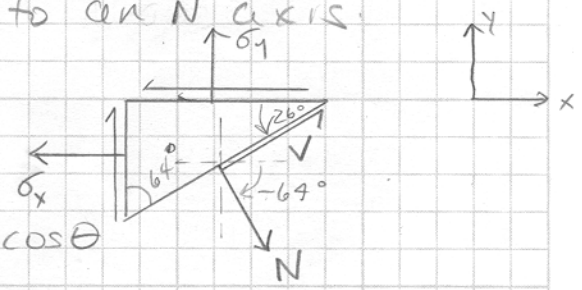

$$\sigma_n = \sigma_x \cos^2\theta + \sigma_y \sin^2\theta + 2\tau_{xy}\sin\theta\cos\theta$$

$$\sigma_n = 20(\cos^2(-64°)) + 120\sin^2(-64°) - 2(80)\sin(-64°)\cos(-64°)$$

$$\boxed{\sigma_n = 163.8\ MPa}$$

$$\tau_{nt} = -(\sigma_x - \sigma_y)\sin\theta\cos\theta + \tau_{xy}(\cos^2\theta - \sin^2\theta)$$

$$= -(20-120)\sin(-64°)\cos(-64°) - 80(\cos^2(-64°) - \sin^2(-64))$$

$$\boxed{\tau_{nt} = 9.85\ MPa}$$

PROBLEM NO. 2-95 | MECHANICAL ENGINEERING DEPARTMENT | NAME Koul

DATE | SECTION

Given: Fig P2-95a, b

$\sigma_x = 18$ ksi

$\sigma_y = 13$ ksi

$\tau_{xy} = 6$ ksi

Find: (a) σ_n + τ_{nt} on AB

(b) σ_n', σ_t', τ_{nt}' on rotated element

Relationships:

Eq 2-12
2-13

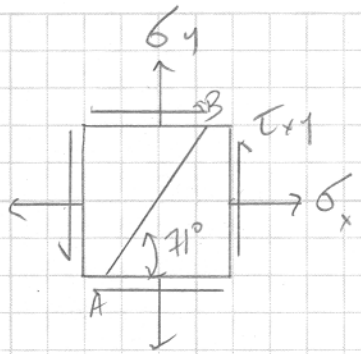

System Sketch or FBD

Solution:

(a) $\theta = -19°$ or $+161°$

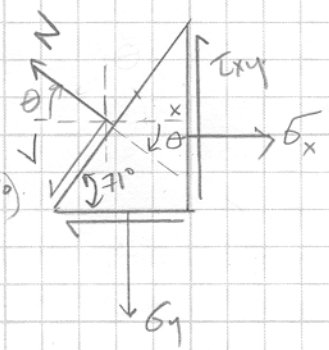

$\sigma_n = \sigma_x \cos^2\theta + \sigma_y \sin^2\theta + 2\tau_{xy}\sin\theta\cos\theta$

$= 18\cos^2(-19°) + 13\sin^2(-19°) + 2(6)\sin -19°(\cos -19°)$

$\boxed{\sigma_n = 13.8 \text{ MPa}}$

$\tau_{nt} = -(\sigma_x - \sigma_y)\sin\theta\cos\theta + \tau_{xy}(\cos^2\theta - \sin^2\theta)$

$-(18-13)\sin(-19°)\cos(-19°) + 6(\cos^2(-19°) - \sin^2(-19°))$

$\boxed{\tau_{nt} = 6.3 \text{ MPa}}$

(b) Rotating the element is similar to choosing inclined planes.

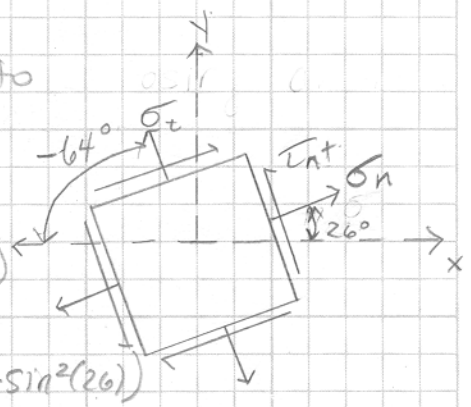

For σ_n, $\theta = 26°$

$\sigma_n = 18\cos^2(26°) + 13\sin^2(26°) + 2(6)\sin(26°)\cos(26°)$

$\boxed{\sigma_n = 21.8 \text{ MPa}}$

$\tau_{nt} = -(18-13)\sin(26°)\cos(26°) + 6(\cos^2(26°) - \sin^2(26))$

$\boxed{\tau_{nt} = 1.7 \text{ MPa}}$

For σ_t $\theta = -64°$ or $116°$

$\sigma_t = 18\cos^2(-64°) + 13\sin^2(-64°) + 2(6)\sin(-64°)\cos(-64°)$

$\boxed{\sigma_t = 9.2 \text{ MPa}}$

PROBLEM NO. 2-99	MECHANICAL ENGINEERING DEPARTMENT	NAME KOUL
DATE		SECTION

Given: Fig P2-99

$\sigma_n = 8000$ psi (on AA)

$\sigma_x = 8000$ psi

$\sigma_y = 0$

Find: (a) $|\tau_n|$, $|\tau_v|$

(b) τ_{nt} (on AA)

Relationships:

Eq 2-12

2-13

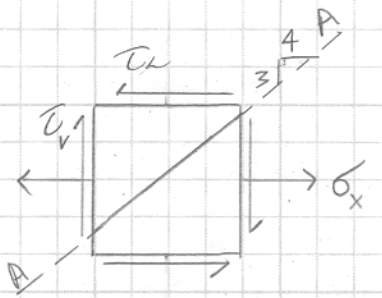

System Sketch or FBD

Solution:

$\theta = 127°$ or $-53°$

In drawing:

$\tau_v = \tau_n = -\tau_{xy} = -\tau_{yx}$.

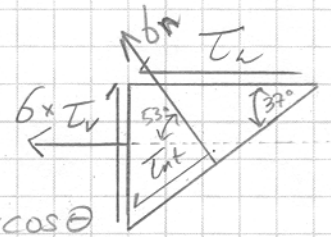

(a) $\sigma_n = \sigma_x \cos^2\theta + \sigma_y \sin^2\theta + 2\tau_{xy}\sin\theta\cos\theta$

$8000 = 8000\cos^2(-53) + 2\tau_{xy}\sin(-53)\cos(-53)$

$\tau_{xy} = -5333$ psi

$\boxed{|\tau_v| = |\tau_n| = 5333 \text{ psi}}$

(b) $\tau_{nt} = -(\sigma_x - \sigma_y)\sin\theta\cos\theta + \tau_{xy}(\cos^2\theta - \sin^2\theta)$

$\sigma_x = 8000$ psi $\quad$ θ same as above

$\sigma_y = 0$

$\tau_{xy} = -5333$ psi

$\tau_{nt} = -(8000)\sin(-53)\cos(-53) - 5333(\cos^2(-53) - \sin^2(-53))$

$\boxed{\tau_{nt} = 5333 \text{ psi}}$