PROBLEM NO. 2-110 | MECHANICAL ENGINEERING DEPARTMENT | NAME KOUL

DATE | SECTION

Given: Fig P2-110 $\sigma_y = -25\,MPa$, $\sigma_x = 75\,MPa$, $\tau_{xy} = -35\,MPa$

Find: $\sigma_{p1}, \sigma_{p2}, \sigma_{p3}$ + sketch

τ_{max}

Relationships:

Eq. 2-15, 2-18, 2-14

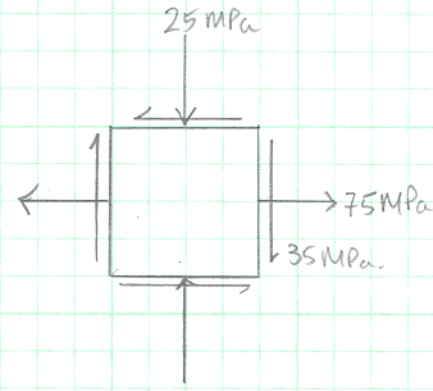

System Sketch or FBD

Solution:

Plane stress $\boxed{\sigma_{p3} = 0.}$

$$\sigma_{p1} = \frac{\sigma_x + \sigma_y}{2} + \sqrt{\left(\frac{\sigma_x - \sigma_y}{2}\right)^2 + \tau_{xy}}$$

$$= \frac{75-25}{2} + \sqrt{\left(\frac{75+25}{2}\right)^2 - 35}$$

$$\boxed{\sigma_{p1} = 86\,MPa.}$$

$$\sigma_{p2} = \frac{\sigma_x + \sigma_y}{2} - \sqrt{\left(\frac{\sigma_x - \sigma_y}{2}\right)^2 + \tau_{xy}}$$

$$\boxed{\sigma_{p2} = -36\,MPa}$$

$$\tau_{max} = \frac{\sigma_{max} - \sigma_{min}}{2} = \frac{86+36}{2}$$

$$\boxed{\tau_{max} = 61\,MPa}$$

In order to sketch we need orientation

$$\tan 2\theta_p = \frac{2\tau_{xy}}{\sigma_x - \sigma_y} = \frac{-70}{100} = -0.7.$$

$\theta_{p1} = -17.5° \rightarrow \sigma_{p1}$

$\theta_{p2} = 72.5° \rightarrow \sigma_{p2}$

= planes of max σ + τ

Direction of τ_{max} opposes larger principle σ

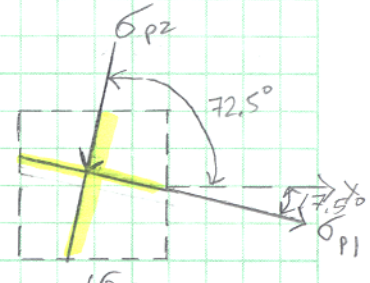

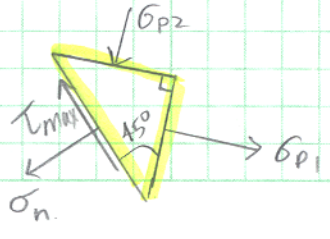

PROBLEM NO. 2-116 | MECHANICAL ENGINEERING DEPARTMENT | NAME KOUL

DATE | SECTION

Given: Fig P2-116

$\sigma_y = 36\,MPa$

$\sigma_x = 72\,MPa$

$\tau_{xy} = -24\,MPa$

Find: $\sigma_{P1}, \sigma_{P2}, \tau_{max}$, sketch

σ_{P3}

Relationships:

Eq. 2-15

2-18

2-14

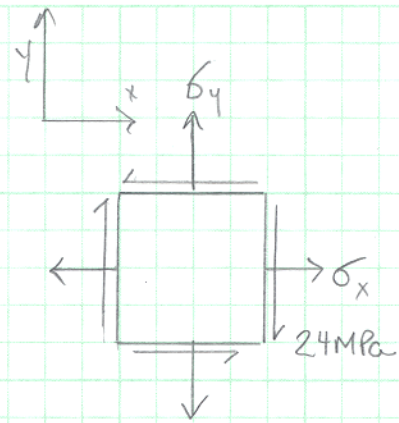

System Sketch or FBD

Solution:

$$\sigma_{P1,P2} = \frac{\sigma_x + \sigma_y}{2} \pm \sqrt{\left(\frac{\sigma_x - \sigma_y}{2}\right)^2 + \tau_{xy}^2}$$

$$= 54 \pm 30$$

$$\boxed{\sigma_{P1} = 84\,MPa, \quad \sigma_{P2} = 24\,MPa, \quad \sigma_{P3} = 0}$$

$$\tau_{max} = \frac{\sigma_{max} - \sigma_{min}}{2} = \frac{84 - 0}{2}$$

$$\boxed{\tau_{max} = 42\,MPa}$$

$\sigma_{P1} > \sigma_{P2} > \sigma_{P3}$

(plane of max shear will involve the z dimension, $\tau_{max} \neq \tau_P$)

Determine θ_P for sketch.

$$\tan 2\theta_P = \frac{2\tau_{xy}}{\sigma_x - \sigma_y} = \frac{-48}{36}$$

$\theta_{P1} = -26.6°$

$\theta_{P2} = 63.4°$

= planes of max stress

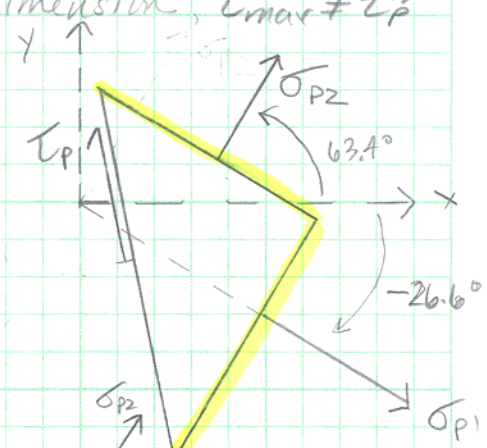

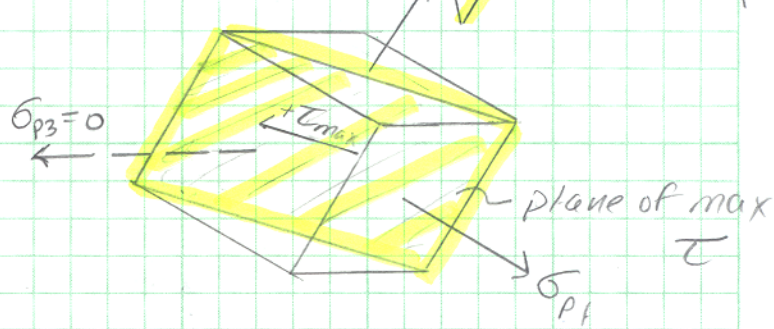

PROBLEM NO. 2-122	MECHANICAL ENGINEERING DEPARTMENT	NAME KOUL
DATE		SECTION

Given: Fig P2-122 $\sigma_y = -64\,MPa$
$\tau_{p1} = -8\,MPa$
$\tau_{max} = 95\,MPa$
$\sigma_z = \sigma_{p3} = 0$

Find: σ_x
τ_{xy}
σ_{p2}

Relationships:
Eq 2-18, 2-19, 2-16

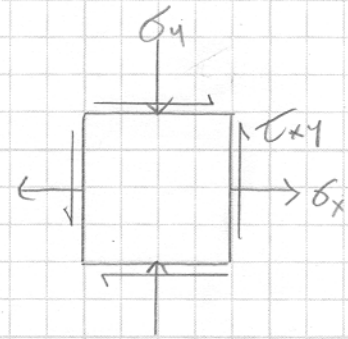

System Sketch or FBD

Solution:

σ_{p2} represents maximum stress due to σ_y on the principle plane. Therefore, $|\sigma_{p2}| > \sigma_y$ and the sign must be the same for both: $\sigma_y < -64\,MPa$ and

$\sigma_{p2} < \sigma_{p1} < \sigma_{p3}$ and $\boxed{\sigma_{p3} = 0}$

[2-18] $\tau_{max} = \dfrac{\cancel{\sigma_{p3}}^{\,0} - \sigma_{p2}}{2} = 95\,MPa$

$$\boxed{\sigma_{p2} = -190\,MPa}$$

[2-19] $\sigma_{p1} + \sigma_{p2} = \sigma_x + \sigma_y$

$-8 - 190 = \sigma_x - 64$

$$\boxed{\sigma_x = 134\,MPa}$$

Because σ_{p1} + σ_{p2} have same sign and $|\sigma_{p2}| > |\sigma_{p1}|$,
$\tau_p = \tau_{max}$

[2-16] $\tau_p = \pm\sqrt{\left(\dfrac{\sigma_x - \sigma_y}{2}\right)^2 + \tau_{xy}} = 95\,MPa$

$\sqrt{\left(\dfrac{134+64}{2}\right)^2 + \tau_{xy}} = 95$

$$\boxed{\tau_{xy} = 84\,MPa}$$