PROBLEM NO. Prob 9.44	MECHANICAL ENGINEERING DEPARTMENT	NAME
DATE		SECTION

Given:

Repeat Problem 9.43 replacing the OFWH w/ a CFWH

Find:

Relationships:

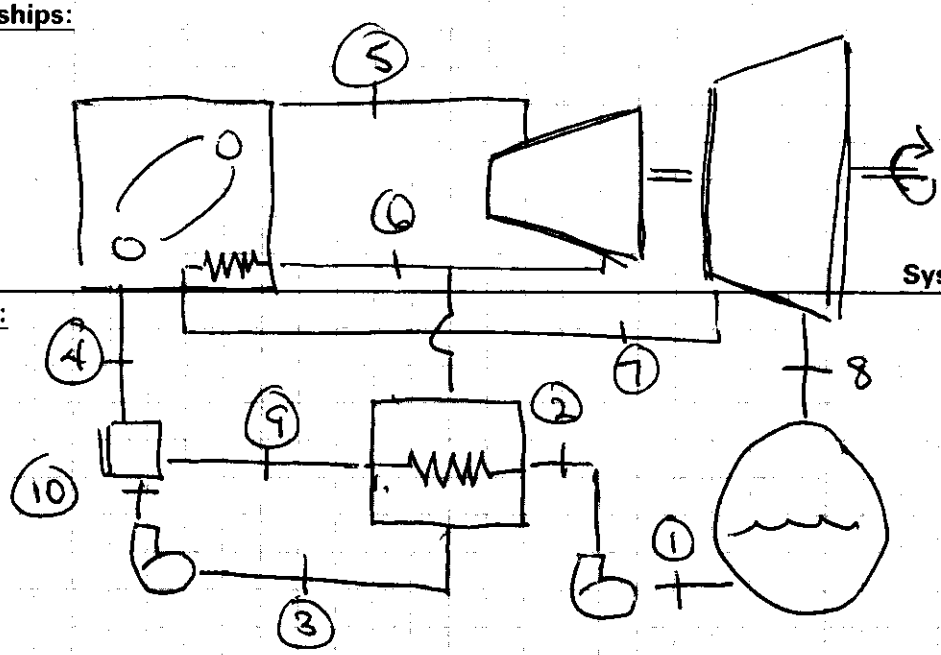

System Sketch or FBD

Solution:

$\dot{W}_{net} = 80$ MW

$P_{Boiler} = P_4 = P_9 = P_{10} = P_5 = 10$ MPa $= P_2$

$P_{CFWH} = P_6 = P_7 = P_3 = 0.8$ MPa

$P_{cond} = P_8 = P_1 = 10$ kPa

$T_5 = 550°C$ $\quad T_7 = 500°C$

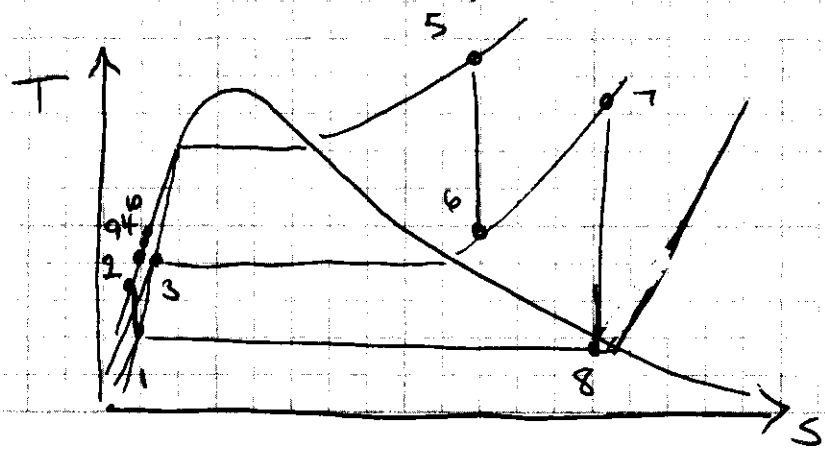

```
{Problem 9.44}

P[1]=10
x[1]=0
h[1]=enthalpy(steam,P=P[1],x=x[1])
s[1]=entropy(steam,P=P[1],x=x[1])

P[2]=10000
s[2]=s[1]
h[2]=enthalpy(steam,P=P[2],s=s[2])

P[3]=800
x[3]=0
h[3]=enthalpy(steam,P=P[3],x=x[3])
s[3]=entropy(steam,P=P[3],x=x[3])
T[3]=temperature(steam,P=P[3],x=x[3])

P[10]=10000
s[10]=s[3]
h[10]=enthalpy(steam,P=P[10],s=s[10])

P[9]=P[2]
T[9]=T[3]
h[9]=enthalpy(steam,P=P[9],T=T[9])

y*h[10]+(1-y)*h[9]=h[4]

P[5]=P[2]
T[5]=550
h[5]=enthalpy(steam,P=P[5],T=T[5])
s[5]=entropy(steam,P=P[5],T=T[5])

P[6]=P[3]
s[6]=s[5]
h[6]=enthalpy(steam,P=P[6],s=s[6])

P[7]=P[6]
T[7]=500
h[7]=enthalpy(steam,P=P[7],T=T[7])
s[7]=entropy(steam,P=P[7],T=T[7])

P[8]=P[1]
s[8]=s[7]
h[8]=enthalpy(steam,P=P[8],s=s[8])

{a) determine the mass flow rate of the steam through the boiler}

Wdot_net=80000
wturb=(h[5]-h[6])+(1-y)*(h[7]-h[8])
wpump=(1-y)*(h[1]-h[2])
wnet=wturb+wpump
y*(h[6]-h[3])=(1-y)*(h[9]-h[2])
mdot=Wdot_net/wnet
```

{b) thermal efficiency of the cycle}

qin=h[5]-h[4]+(1-y)*(h[7]-h[6])

eta_th=wnet/qin

SOLUTION
Unit Settings: [kJ]/[C]/[kPa]/[kg]/[degrees]

η_{th} = 0.4444 mdot = 54.41 qin = 3309
$Wdot_{net}$ = 80000 wnet = 1470 wpump = -8.051
wturb = 1478 y = 0.2006

Arrays Table

	h_i [kJ/kg]	P_i	s_i [kJ/kg-K]	T_i [C]	x_i
1	191.7	10	0.6489		0
2	201.8	10000	0.6489		
3	721.1	800	2.046	170.4	0
4	727.3				
5	3501	10000	6.756	550	
6	2811	800	6.756		
7	3481	800	7.867	500	
8	2494	10	7.867		
9	726.2	10000		170.4	
10	731.4	10000	2.046		

PROBLEM NO. Prob 10.11	MECHANICAL ENGINEERING DEPARTMENT	NAME
DATE		SECTION

Given:

Refrigerator R-134a

Ideal Refrigeration Cycle

Find:

$P_{evap} = 0.12$ MPa

Relationships:

$P_{cond} = 0.7$ MPa

$\dot{m} = 0.05$ kg/s

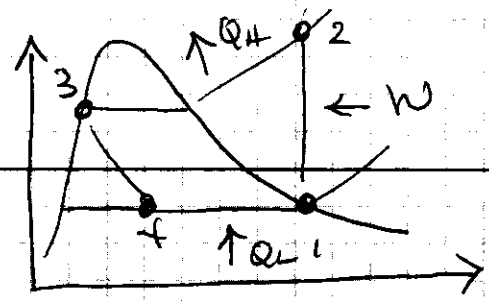

System Sketch or FBD

Solution:

State 1

$P_1 = 0.12$ MPa $\quad x = 1$

$h_1 = 233.86$ kJ/kg

$s_1 = 0.9354$ kJ/kgK

State 2

$P_2 = 0.7$ MPa

$s_2 = s_1 = 0.9354$

$h_2 = 270.2$ kJ/kg ← Table A-13

State 3

$P_3 = 0.7$ MPa

$x_3 = 0$

$h_3 = 86.78$ kJ/kg

State 4

$h_3 = h_4 = 86.78$ kJ/kg

a) $\dot{Q}_L = \dot{m}[h_1 - h_4]$

$\dot{Q}_L = 7.35$ kW

b) $\dot{Q}_H = \dot{m}[h_2 - h_3]$

$\dot{Q}_H = 9.171$ kW

$\dot{W}_{in} = \dot{m}[h_2 - h_1]$

$\dot{W}_{in} = 1.82$ kW

c) $COP_R = \dfrac{\dot{Q}_L}{\dot{W}_{in}} = 4.04$

PROBLEM NO. Prob 10.19	MECHANICAL ENGINEERING DEPARTMENT	NAME
DATE		SECTION

Given: Refrigerant R-134a

Find: State 1 $P_1 = 140$ kPa $T_1 = -10°C$

Relationships: State 2 $P_2 = 1$ MPa $\eta_c = 0.78$

State 3 $P_3 = 0.95$ MPa $T_3 = 30°C$

State 4 $h_4 = h_3$

State 5 $T_5 = -18.5°C$ $x_5 = 1$

System Sketch or FBD

Solution:

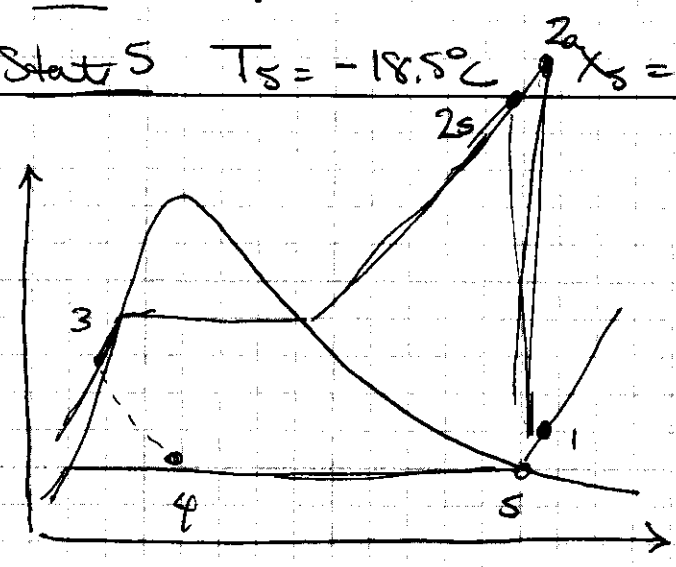

a) determine power input to compressor

$h_1 = 243.40$ kJ/kg $s_1 = 0.9606$ kJ/kg K

$h_{2s} = 286.04$ kJ/kg $v_1 = 0.14549$ m³/kg

$w_{cs} = 42.64$ $\eta_c = \frac{w_{cs}}{w_{ca}}$

$w_{ca} = 54.67$ kJ/kg

$\dot{m} = \dot{V}/v = \frac{0.3 \text{ m}^3/\text{min}}{0.14549 \text{ m}^3/\text{kg}} \cdot \text{min}/60\text{s}$

$\dot{m} = 0.0344$ kg/s

$\dot{W}_{c_a} = 1.88$ kW

PROBLEM NO. Prob 10.19	MECHANICAL ENGINEERING DEPARTMENT	NAME
DATE		SECTION

Given: b) rate of heat removal from refrigerated space

Find: $\dot{Q} = \dot{m}[h_5 - h_4]$

Relationships:

State 5

$T_5 = -18.5\,C \quad h_5 = 236.2\ kJ/kg$

State 3

$P_3 = 0.95\,MPa \quad T_3 = 30°C$

$h_3 \cong h_f @ 30°C = 91.49\ kJ/kg$

System Sketch or FBD

Solution:

State 4

$h_4 = h_3 = 91.49\ kJ/kg$

$\dot{Q}_L = 4.98\ kW$

c) Pressure Drop and Heat loss in the line between evaporator and compressor

$\dot{Q} = \dot{m}[h_1 - h_8] = 0.245\ kW$

$P_1 = 140\ kPa$

$P_5 = 141.87\ kPa$

$\Delta P = 1.87\ kPa$

PROBLEM NO. Prob 10.28E	MECHANICAL ENGINEERING DEPARTMENT	NAME
DATE		SECTION

Given:

Heat Pump – Ideal Vapor–Compression Cycle

R-134a

Find:

$\dot{Q}_H = 60{,}000$ Btu/hr

Relationships:

$P_{evap} = 50$ psia $\quad P_{cond} = 120$ psia

State 1

$P_1 = 50$ psia $\quad X_1 = 1$

State 2

$P_2 = 120$ psia

System Sketch or FBD

Solution:

$h_1 = 107.43$ psia Btu/lbm

$s_1 = 0.2189$ Btu/lbmR

$s_2 = s_1 = 0.2189$ Btu/lbmR

$h_2 = 115.1$ Btu/lbm

State 3

$P_3 = 120$ psia $\quad X_3 = 0$

$h_3 = 40.91$ Btu/lbm

State 4

$h_3 - h_4 = 40.91$ Btu/lbm

$$COP_{HP} = \frac{\dot{Q}_H}{\dot{W}_{in}} = \frac{h_2 - h_3}{h_2 - h_1}$$

$COP_{HP} = 9.673$

$\dot{W}_{in} = \dot{Q}_H / COP_{HP} = 6202.8$ Btu/hr

$\dot{W}_{in} = 2.44$ hp

resistive heater

$\dot{W}_{in} = \dot{Q}_H = 60{,}000$ Btu/hr

$\dot{W}_{in} = 23.58$ hp

Savings $\longrightarrow$ $\boxed{21.14 \text{ hp}}$